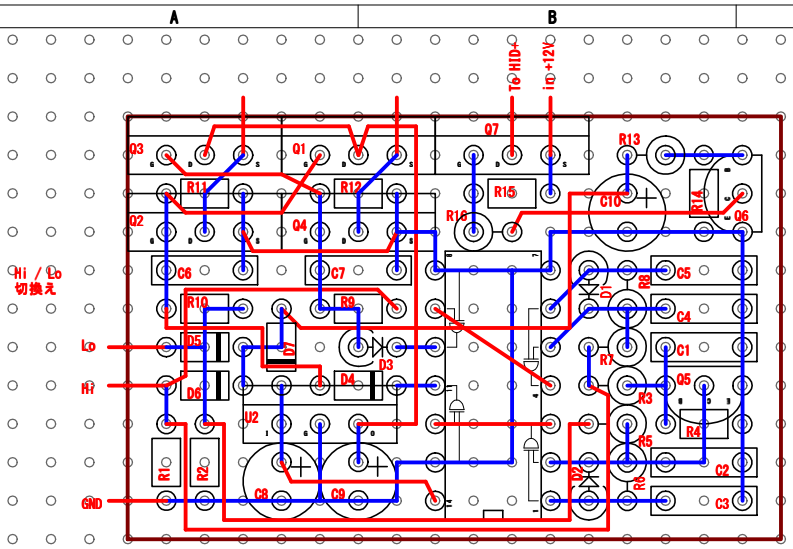

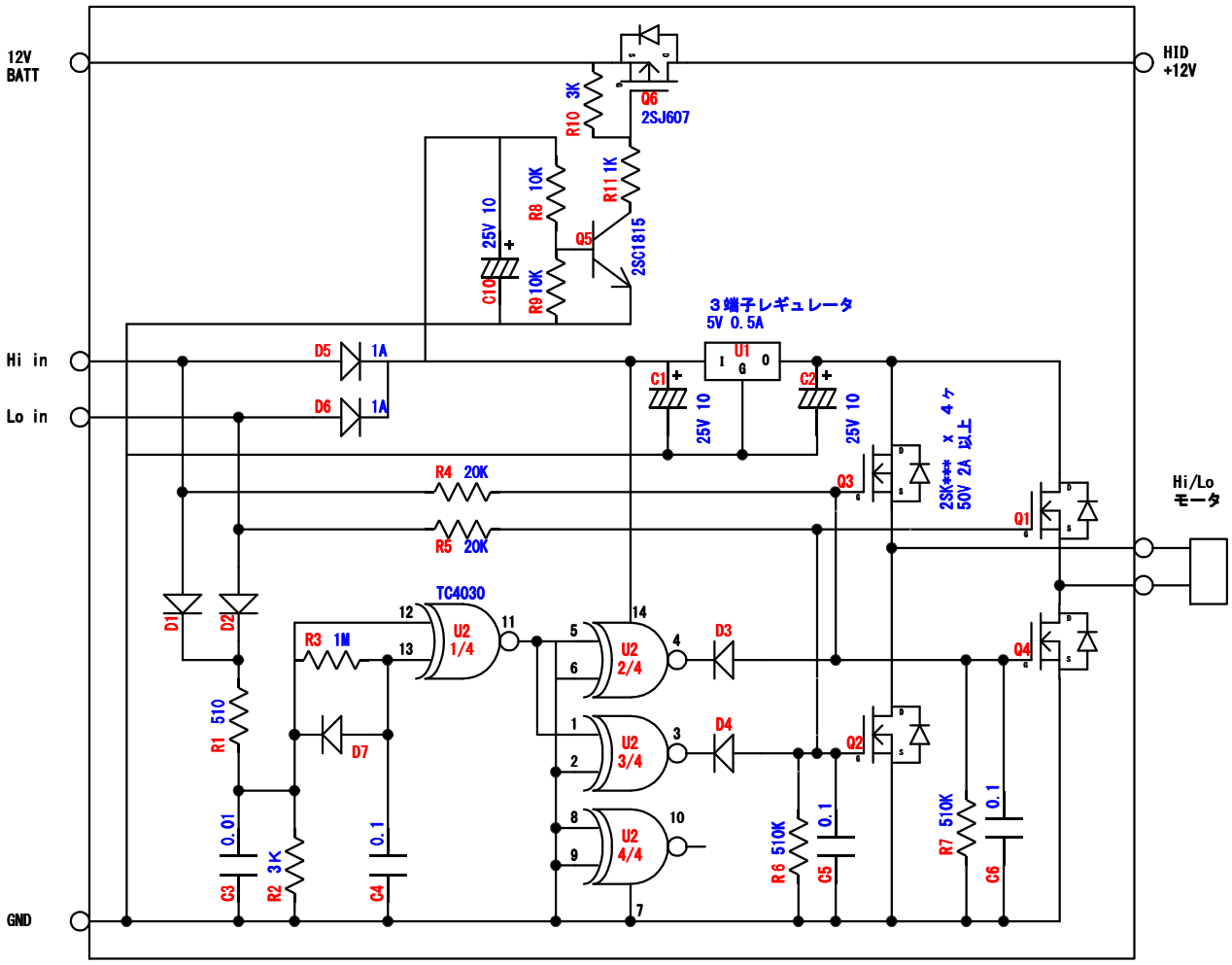

FILE NAME			
SCALE	/	MATERIALS	TITEL
UNITS	m/m	DWG. DATE	DWAING No.
ANGLE			
CONTENTS	DATE		taka-laboratory